Hay Bale Stack Climber

Product: 1000312

A fun themed climber with varying degrees of climbing difficulties. Constructed of durable Glass Fiber Reinforced Concrete (GFRC). The unique design allows for 360 degrees of climbing, integrated handholds, realistic texture.

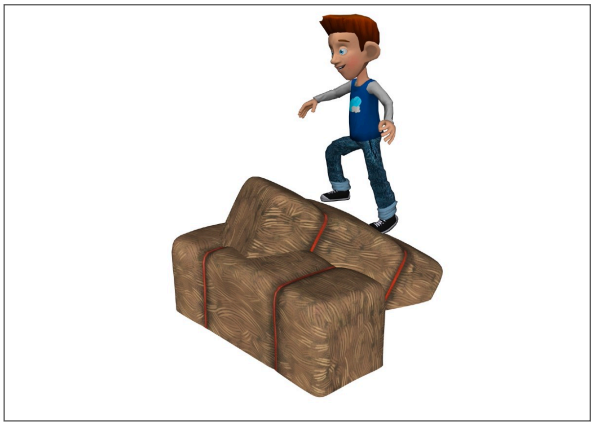

L: 4’ 6”
W: 4’ 3”
H: 2’ 6”
1,260 LBS

All images and concepts are Copyright © 2020, Cre8Play, LLC-All rights reserved. Cre8Play may change or modify this information as necessary and without notice.

~ All dimensions are approximate ~
~ Heights shown from top of surfacing ~
User Group Age: 2-12
Last Revised 12/1/2021

5121 Winnetka Ave N • Suite 108
New Hope, MN 55428
612.670.8195
info@cre8play.com
cre8play.com

Hay Bale Stack Climber

Product: 1000312

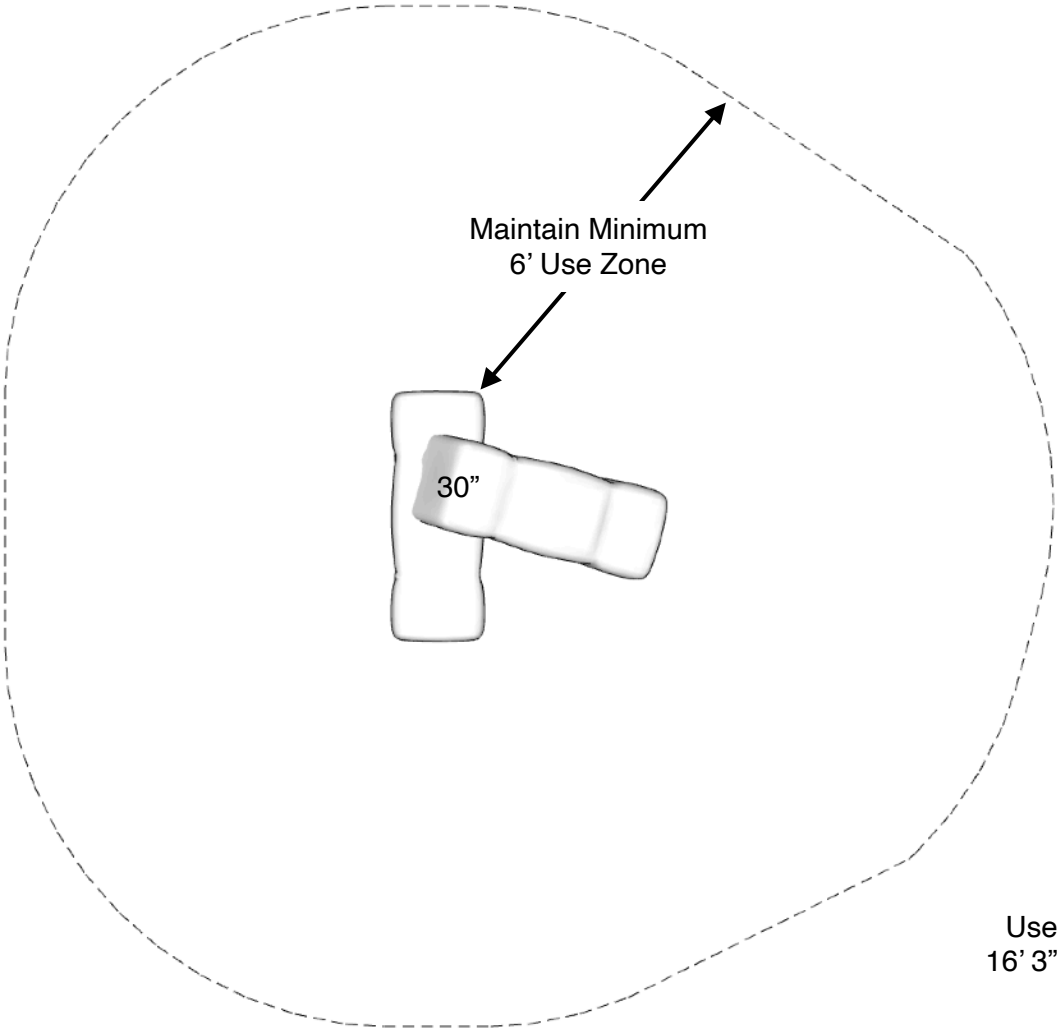

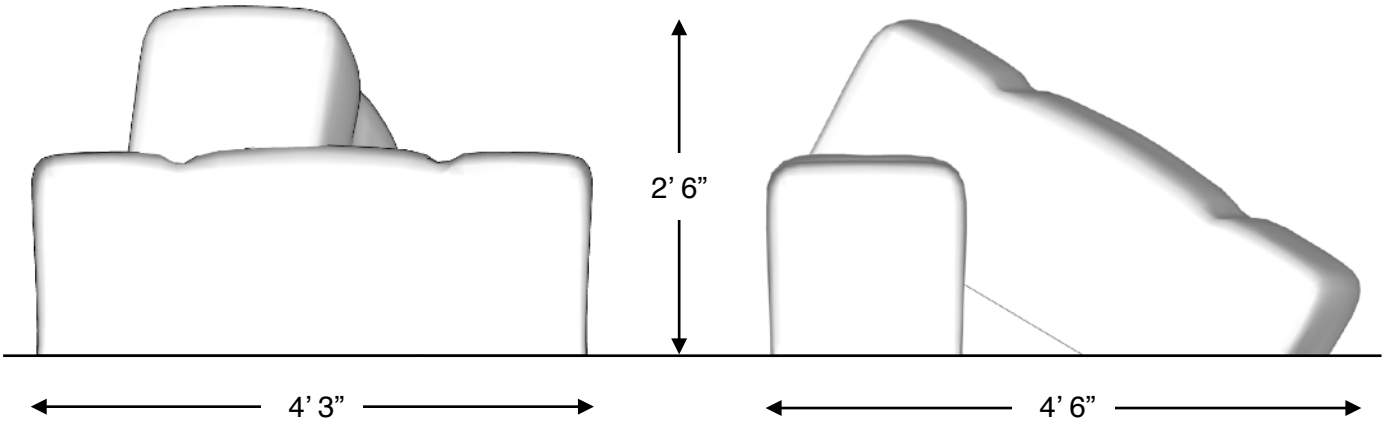

All images and concepts are Copyright © 2020, Cre8Play, LLC-All rights reserved. Cre8Play may change or modify this information as necessary and without notice.

~ All dimensions are approximate ~
~ Heights shown from top of surfacing ~
User Group Age: 2-12
Last Revised 12/1/2021

5121 Winnetka Ave N • Suite 108
New Hope, MN 55428
612.670.8195
info@cre8play.com
cre8play.com

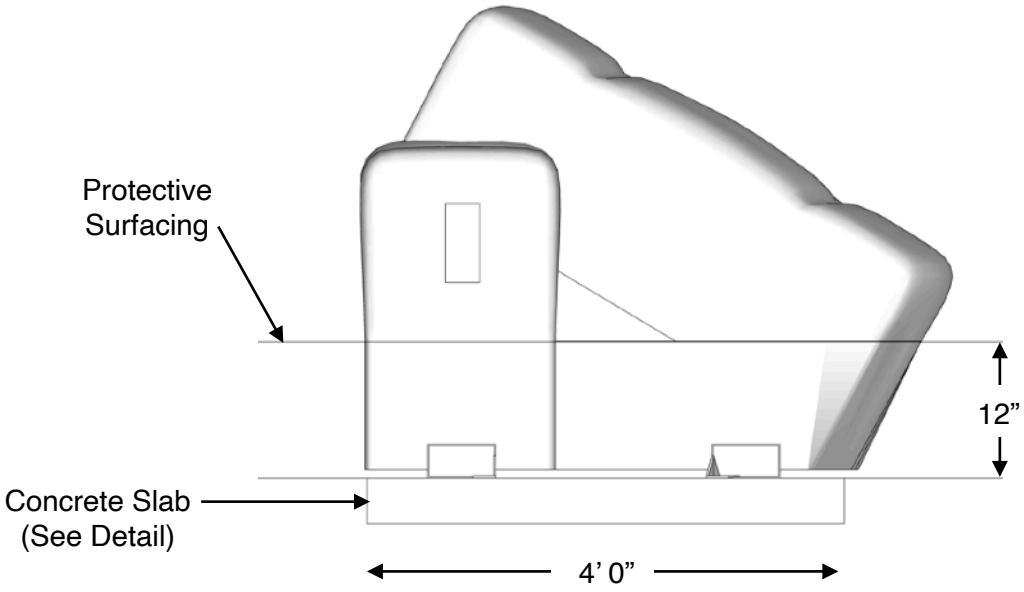

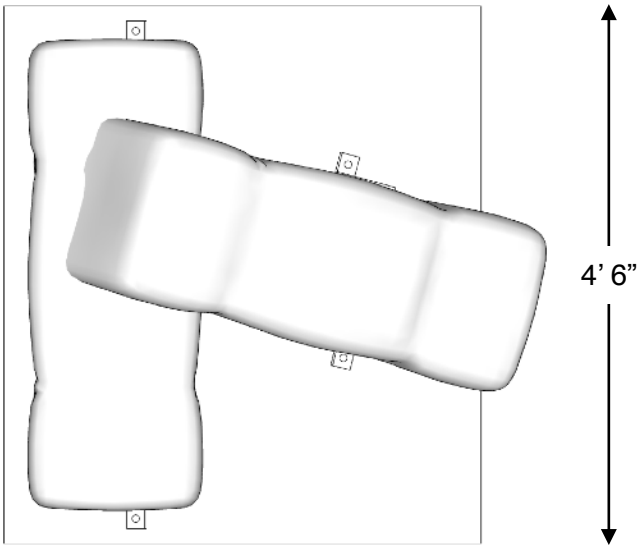

If you determine that less than 12” of surfacing is required, make sure the top of the concrete slab is 12” below the top of the protective surfacing.

All images and concepts are Copyright © 2020, Cre8Play, LLC-All rights reserved. Cre8Play may change or modify this information as necessary and without notice.

~ All dimensions are approximate ~
~ Heights shown from top of surfacing ~
User Group Age: 2-12
Last Revised 12/1/2021

5121 Winnetka Ave N • Suite 108
New Hope, MN 55428
612.670.8195
info@cre8play.com
cre8play.com

NOTES PRIOR TO CONSTRUCTION:

-Use appropriate equipment to lift and move the play equipment.
-Check local codes and requirements prior to digging or installing any equipment.

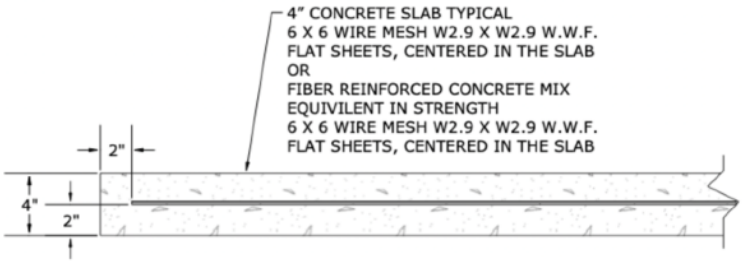

TYPICAL 4" CONCRETE SLAB DETAIL (NOT TO SCALE)
CHECK LOCAL SOIL CONDITIONS.

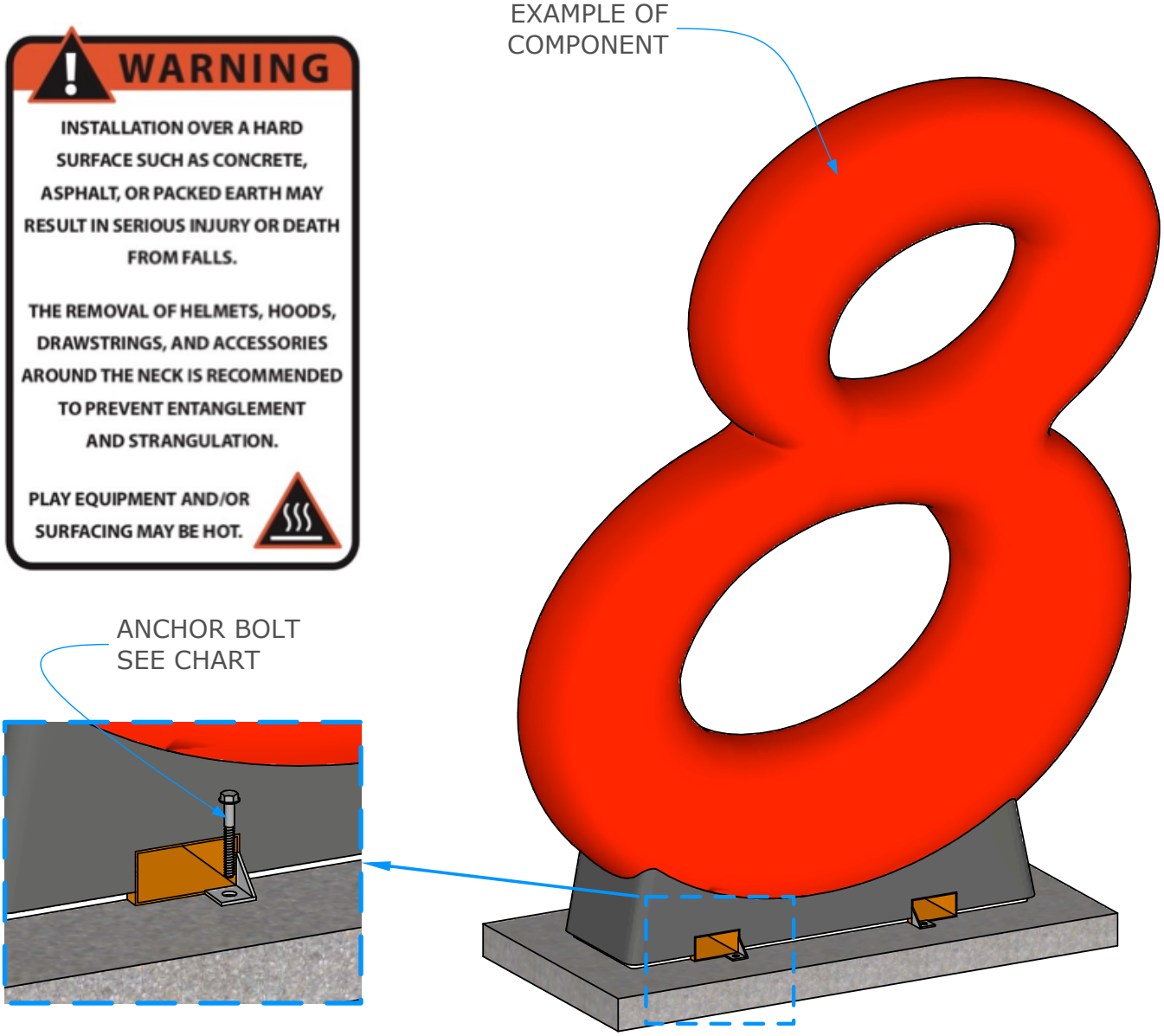

All images and concepts are Copyright © 2020, Cre8Play, LLC-All rights reserved. Cre8Play may change or modify this information as necessary and without notice.

~ All dimensions are approximate ~
~ Heights shown from top of surfacing ~
User Group Age: 2-12
Last Revised 12/1/2021

5121 Winnetka Ave N • Suite 108
New Hope, MN 55428
612.670.8195
info@cre8play.com
cre8play.com

NOTE: Read installation instructions thoroughly before starting installation process.

Step 1: Lay out the area and prepare the site for install. Concrete must be installed over a solid, level base. Check local soil condition and codes. See product installation instructions for minimum use zone requirements to ensure proper spacing and adequate surfacing area.

Step 2: Pour a concrete base for the component. Refer to the typical concrete slab section in this document. The concrete should be flush with the ground level. Allow time for the concrete to completely cure before continuing.

Step 3: Using an appropriate forklift or boom, place component into final installation location. See the hardware recommendation for information on anchoring equipment down to your concrete slab. Refer to the surfacing manufacturer for installation of an approved impact attenuating play surface around the component with a minimum use zone in every direction.

Step 4: Locate your anchor bolts, supplied. Using the proper standard drill bit size noted in the installation table, drill the concrete to the appropriate hole depth through the mounting holes.

Step 5: Insert the anchor bolt into the hole and tighten until the bolt is fully seated. Do NOT over tighten the anchor bolts.

Included Items:

Item	Description	Quantity
Hay Bale Stack Climber	Play Equipment	1
Anchor Bolt 1/2” x 3”	Mounting Hardware	4

Anchor Bolt Installation:

Anchor Bolt Size	ANSI Standard Drill Bit Diameter	Anchor Head (Socket Size)	Minimum Embedment	Hole Depth
1/2” x 3”	7/16”	3/4”	2 1/2”	3 1/2”
5/8” x 4”	1/2”	13/16”	3 1/2”	4 1/2”
5/8” x 6”	1/2”	13/16”	5 1/2”	6 1/2”

Step 1: Drill

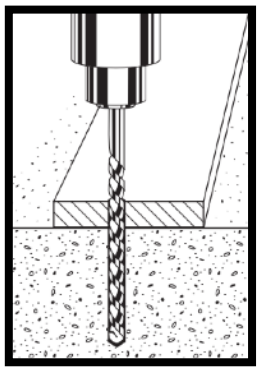

Step 2: Anchor

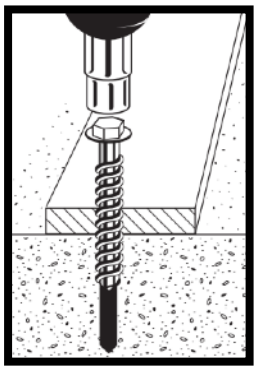

NOTE: Always wear eye protection appropriate to the task at hand.

All images and concepts are Copyright © 2020, Cre8Play, LLC-All rights reserved. Cre8Play may change or modify this information as necessary and without notice.

~ All dimensions are approximate ~
~ Heights shown from top of surfacing ~
User Group Age: 2-12
Last Revised 12/1/2021

5121 Winnetka Ave N • Suite 108
New Hope, MN 55428
612.670.8195
info@cre8play.com
cre8play.com